WE RESERVE ALL RIGHTS IN THIS DOCUMENT AND IN THE INFORMATION CONTAINED THERIN. REPRODUCTION, USE OR DISCLOSURE TO THIRD PARTIES WITHOUT EXPRESS AUTHORITY IS STRICTLY FORBIDDEN

© vetropack 2000

FUER DIESES DOKUMENT UND DEN DARIN DARGESTELLTEN GEGENSTAND BEHALTEN WIR UNS ALLE RECHTE VOR. VERVIELFALTIGUNGEN, BEKANNTGABE AN DRITTE ODER VERWENDUNG SEINES INHALTS SIND OHNE UNSERE AUSDRUECKLICHE ZUSTIMMUNG VERBOTEN

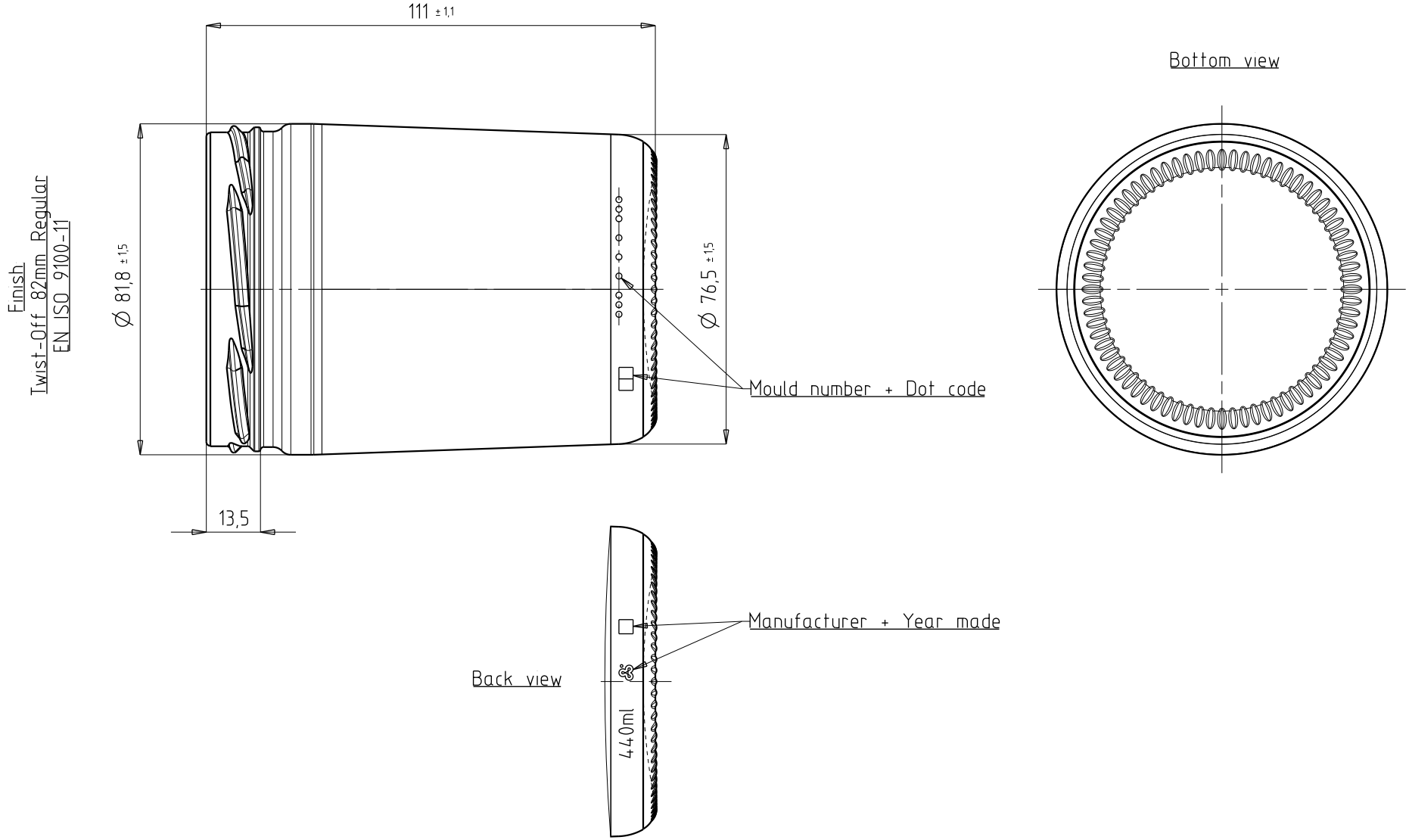

INDEX	ZMENY / modifications	DAT	JMENO
B	Rename	14 1 16	Pam
C	Tolerance capacity brimful change from 9 to 13	15 3 19	Sat

SOUHLAS TECHNOLOGA PT approved		DAT	VIS
SOUH VYRTYMU FtB approved	VYRZAVOD VMG	DAT 15 03 19	VIS PRE
	VYRZAVOD	DAT	VIS
FS SOUHLAS FS approved	VYRZAVOD VMG	DAT 15 03 19	VIS Nel

NETOLEROVANE ROZMERY
DLE DIN 6129

dimensions without tolerances
conform to standard DIN 6129

TEPLOTA PLNENI Filling temperature	≤ 20 °C
TEPLOTA ZPRACOVANI Conditioning temperature	≤ 95 °C
OBSAH CO_2 CO_2 content	≤ g/l
OBSAH ALKOHOLU Alcohol content	≤ Vol%
AXIALNI ZATIZENI Axial pressure	400 daN
POUZITI Disposal	MW / AW / EW X
PROCES Process	BB / PB X / EPB

NOMINAL OBJEM Capacity fillpoint	ml ± ml
TOTAL OBJEM Capacity brimful	440 ml ± 13 ml
HMOTNOST Approx glass weight	240 g
STREDNI TLOUSTKA STENY Average wall thickness	2,96 mm
PRUMER POD USTIM Neck connection dia	78 mm
VNITRNI PRUMER KALIBRU Min through bore	66 mm
BARVA Color	WE

POZNAMKA Remarks	
ZAKAZNIK Customer	Standard
PODOBNY JAKO Similar to	
NAHRAZUJE Replace No	510010440 6050_B
NABIDKA CISLO Offer No	E510109 0440 6049_A
MERITKO Scale	1 1
KRESLIL Des	Pam
DAT	14 01 16
DATA TYP Filetyp	AZ

vetropack

Vetropack Moravia Glass a s
CZ-69701 Kyjov
Tel 00420-518 603 111
www vetropack com

VMG-0701-01-FOR-006-CZ/EN

POZNAMKA
Designation
LUNCH 240g T082RH 440ml
JK LUNCH 240

VYROBEK CISLO
Item No
510010440 6050

INDEX
C

Date: 20-Mar-19 Time: 10:15 Message: Vetropack to SAP released drawing: Original is archived at the designoffice