WE RESERVE ALL RIGHTS IN THIS DOCUMENT AND IN THE INFORMATION CONTAINED THERIN. REPRODUCTION, USE OR DISCLOSURE TO THIRD PARTIES WITHOUT EXPRESS AUTHORITY IS STRICTLY FORBIDDEN

© vetropack 2000

FÜER DIESES DOKUMENT UND DEN DARIN DARGESTELLTEN GEGENSTAND BEHALTEN WIR UNS ALLE RECHTE VOR. VERVIELFÄLTIGUNGEN, BEKANNTGABE AN DRITTE ODER VER-WENDUNG SEINES INHALTS SIND OHNE UNSERE AUSDRUECKLICHE ZUSTIMMUNG VERBOTEN

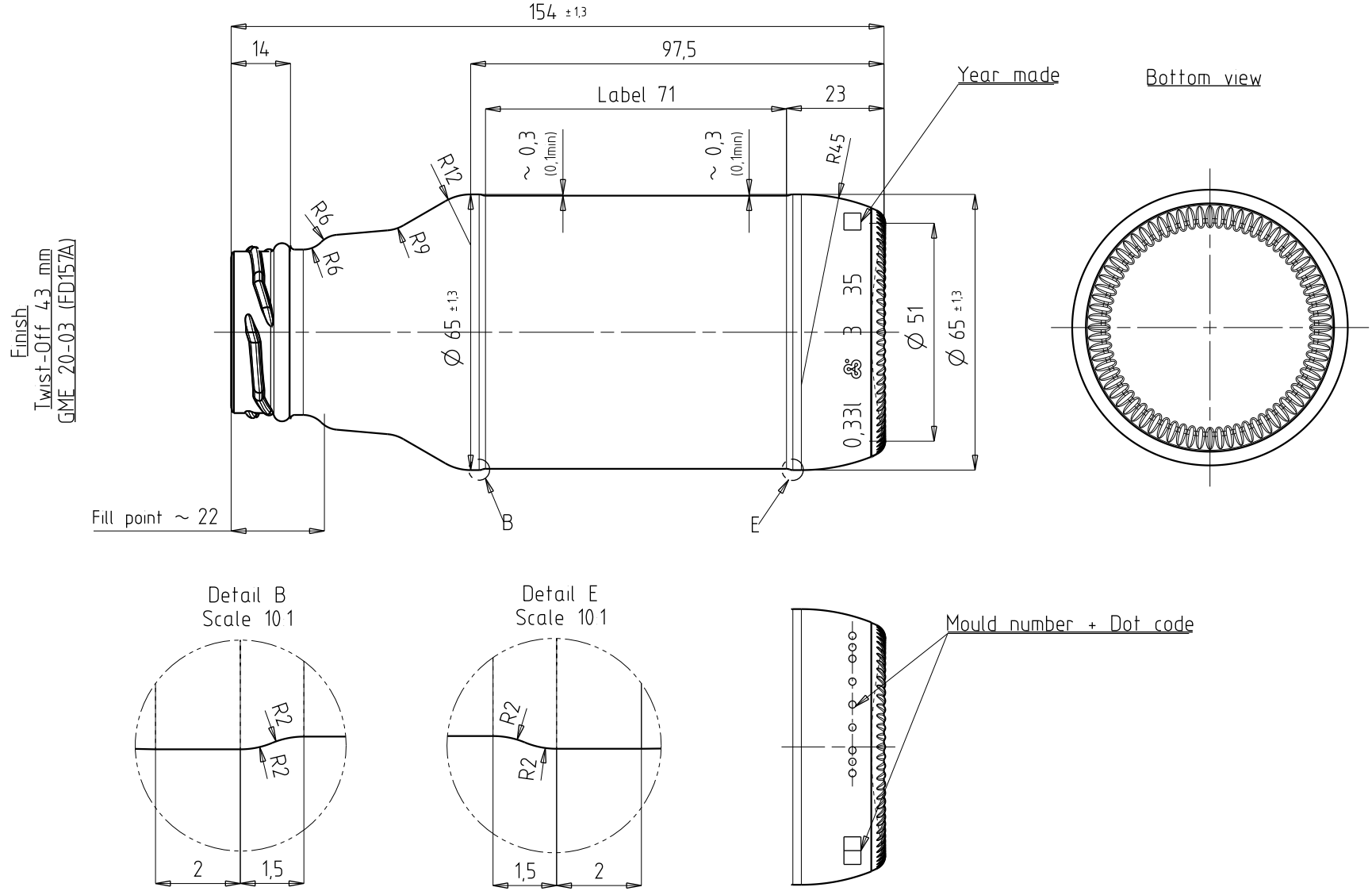

INDEX	ZMENY / modifications	DAT	JMENO
B	Rename	12.3.15	Pam
C	Tolerance capacity brimful change from 9 to 7, process change	30.1.18	Sat

SOUHLAS TECHNOLOGA PT approved		DAT	VIS
SOUH VYRTYMU FtB approved	VYRZAVOD VMG	DAT 30.01.19	VIS PRE
	VYRZAVOD	DAT	VIS
FS SOUHLAS FS approved	VYRZAVOD VMG	DAT 30.01.19	VIS Nel

NETOLEROVANE ROZMERY
DLE DIN 6129

dimensions without tolerances conform to standard DIN 6129

TEPLOTA PLNENI Filling temperature	≤ 95 °C
TEPLOTA ZPRACOVANI Conditioning temperature	≤ 95 °C
OBSAH CO_2 CO_2 content	≤ g/l
OBSAH ALKOHOLU Alcohol content	≤ Vol%
AXIALNI ZATIZENI Axial pressure	100 daN
POUZITI Disposal	MW / AW / EW X
PROCES Process	BB / PB / EPB X

NOMINAL OBJEM Capacity fillpoint	330 ml ± ml
TOTAL OBJEM Capacity brimful	350 ml ± 7 ml
HMOTNOST Approx glass weight	~ 160 g
STREDNI TLOUSTKA STENY Average wall thickness	1,99 mm
PRUMER POD USTIM Neck connection dia	39 mm
VNITRNI PRUMER KALIBRU Min through bore	mm
BARVA Color	WE

POZNAMKA Remarks	
ZAKAZNIK Customer	Standard
PODOBNY JAKO Similar to	
NAHRAZUJE Replace No	5F013 0330 6057_B
NABIDKA CISLO Offer No	E5F0113 0330 6057_D
MERITKO Scale	1:1
KRESLIL Des	Pam
DAT	12.03.15
DATA TYP Filetyp	AZ

vetropack

Vetropack Moravia Glass a.s.
CZ-69701 Kyjov
Tel. 00420-518 603 111
www.vetropack.com

VMG-0701-01-FOR-006-CZ/EN

POZNAMKA Designation
SOCZEK 160g TO43RH 330 ml
FW SOCZEK 160

VYROBEK CISLO Item No
5F013 0330 6057

INDEX C

Date: 05-Feb-19 Time: 14:56 Message: Vetropack to SAP released drawing: Original is archived at the designoffice